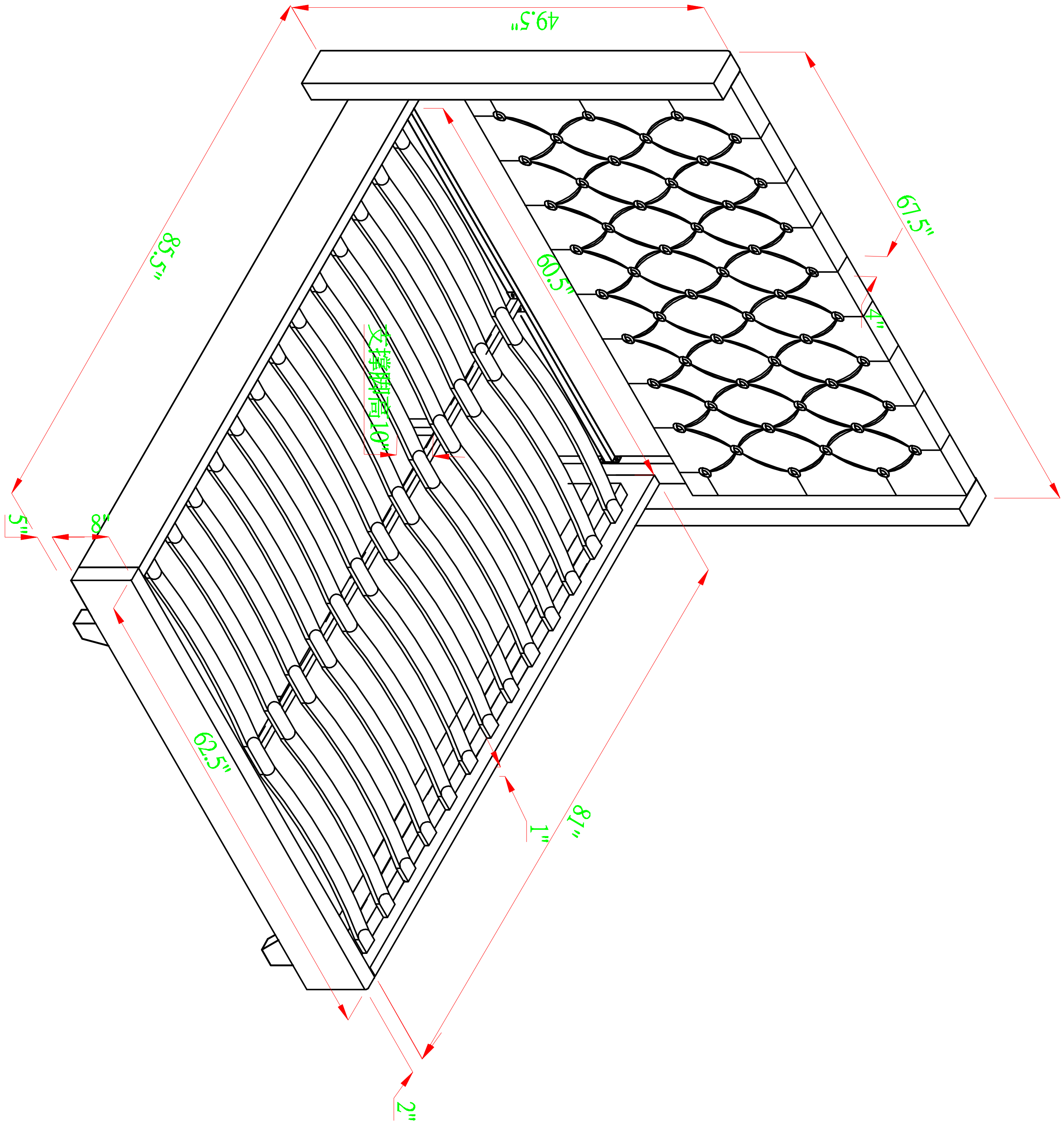
49.5"
85.5"
67.5"
60.5"
4"
支撑脚高10"
5"
8"
62.5"
1"
87"
2"